# Linear Bar Grille// Type LBG39 & Type LBG66



The LBG series grilles are designed to be used in air conditioning systems for either heating or cooling or a combination of both. The distance between the blades allows for either 50 or 75 percent free area and the units can be strengthened for use in public areas such as gymnasiums.

They can be placed in ceilings, floors or as continuous line units or small separate units for fan coils. They are also suitable for slim line applications above radiators.

Removable cores are an option as are hinged cores and removable sections.

## Specification & Construction:
All grilles are manufactured from HE9TF aluminium with a mitred, pleated or welded corner as required.

## Sizes:
Minimum height is 50mm up to 600mm.

Type LBG39

Type LBG39 Core Only

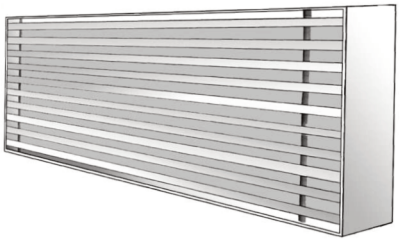

## Finish:
Standard finish is anodised aluminium, however, most units are now polyester epoxy powder coated with a proprietary RAL Colour.

## Alternative Design:
It is possible to vary the width of the bars in one grille i.e. 3mm and 6mm bars, also bars with angle deflections are available for supply air use.

## Fixing:
Through the frame or into fascia or through secret fixings as shown.

## Performance:
Selection data is based on 10°C cooling differential maximum from room with no surface for the air stream to attach to. Throw lengths are the distance between the space and diffuser and the position of the move velocity of the jet is reduced to 0.2m/sec. All jets being set up in the parallel position.

**Plenum Box:**
Plenum with circular adaptors made in galvanised steel. Optional thermoacoustic insulation with foam to a thermic conductivity of 0.04W/mK.

Foam complies with the fire reaction specifications:
UNE 23 - 727 M2
NFP 92 - 501 M2
DIN 4 1 0 2 B2

**System of Attachment:**
(T) - The grille is fixed in place with screws
(S) - The grille is fixed in place with clips (standard supply, sill line only)
(O) - The grille is fixed in place by a hidden screw.

It requires the CM mounting frame. When assembling with metallic frame, measurements H and L increase by 8mm.

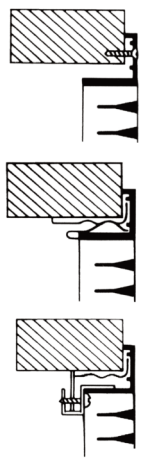

## LBG39

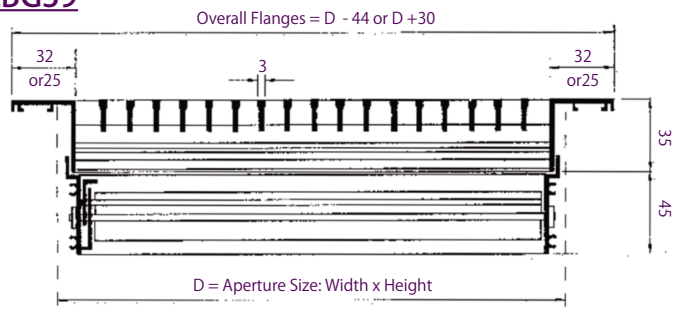


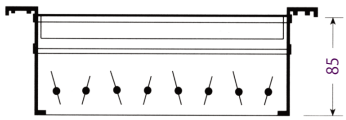


## LBG66

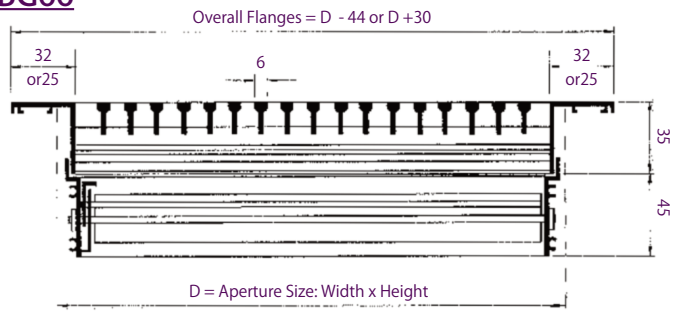


**Finishes:**
Polyester powder-coated in the following colours:

**RAL 9006** - Silver,

**RAL 9010** - White,

**RAL** - Other colours at an additional cost.



tek limited, 14 Seeleys Road, Greet, Birmingham B11 2LQ **T:** +44 (0) 121 766 5005 **E:** sales @tek.ltd.uk **W:** www.tek-ltd.com

| LBG39 Selection Data | | | | | |
|---|---|---|---|---|---|
| Air Volume $m^3$/sec | Spigot Velocity m/sec | Grille Size width x height | Throw m | Pressure Drop n/$m^2$ | Sound Rating nc |
| **0.040** | 50 | 1.25 | 2 | - | 1.0-1.5 |
| **0.100** | 100 | 1.25 | 2 | - | 1.0-1.5 |
| **0.160** | 150 | 1.25 | 2 | - | 2.1-2.8 |
| **0.050** | 50 | 1.75 | 4 | - | 1.5-2.2 |
| **0.140** | 100 | 1.75 | 4 | - | 2.5-3.5 |
| **0.222** | 150 | 1.75 | 4 | - | 3.1-4.0 |
| **0.070** | 50 | 2.25 | 6 | - | 2.2-2.6 |
| **0.190** | 100 | 2.25 | 6 | - | 3.1-4.0 |
| **0.300** | 150 | 2.25 | 6 | - | 4.0-5.0 |
| **0.090** | 50 | 2.75 | 7 | - | 2.4-3.4 |
| **0.230** | 100 | 2.75 | 7 | - | 3.8-4.8 |
| **0.370** | 150 | 2.75 | 7 | - | 4.9-6.5 |
| **0.100** | 50 | 3.25 | 10 | - | 3.0-4.0 |
| **0.275** | 100 | 3.25 | 10 | - | 4.3-5.6 |
| **0.435** | 150 | 3.25 | 10 | - | 6.0-7.6 |
| **0.120** | 50 | 3.75 | 13 | - | 3.4-4.4 |
| **0.300** | 100 | 3.75 | 13 | - | 5.0-6.5 |
| **0.135** | 50 | 4.25 | 16 | - | 4.0-5.0 |
| **0.350** | 100 | 4.25 | 16 | 15 | 5.5.5-7 |
| **0.150** | 50 | 4.75 | 22 | 20 | 4.5-5.6 |
| **0.390** | 100 | 4.75 | 22 | 22 | 6.0-8.3 |

| LBG66 Selection Data | | | | | |
|---|---|---|---|---|---|
| Air Volume $m^3$/sec | Spigot Velocity m/sec | Grille Size width x height | Throw m | Pressure Drop $n/m^2$ | Sound Rating nc |
| **0.04** | 50 | 1.25 | 4 | - | 1.0-1.4 |
| **0.098** | 100 | 1.25 | 4 | - | 1.6-2.0 |
| **0.160** | 150 | 1.25 | 4 | - | 2.2-3.0 |
| **0.05** | 50 | 1.75 | 8 | - | 1.4-2.0 |
| **0.140** | 100 | 1.75 | 8 | - | 2.5-3.0 |
| **0.225** | 150 | 1.75 | 8 | - | 3.0-4.0 |
| **0.072** | 50 | 2.25 | 10 | - | 2.0-2.6 |
| **0.185** | 100 | 2.25 | 10 | - | 3.3-4.0 |
| **0.30** | 150 | 2.25 | 10 | - | 4.0-5.0 |
| **0.085** | 50 | 2.75 | 15 | - | 2.5-3.0 |
| **0.234** | 100 | 2.75 | 15 | - | 5.0-6.2 |
| **0.372** | 150 | 2.75 | 15 | - | 3.0-4.0 |
| **0.10** | 50 | 3.25 | 20 | - | 4.5-5.5 |
| **0.275** | 100 | 3.25 | 20 | - | 7.0-7.7 |
| **0.430** | 150 | 3.25 | 20 | 19 | 6.0-7.6 |
| **0.120** | 50 | 3.75 | 30 | 20 | 3.5-4.5 |
| **0.30** | 100 | 3.75 | 30 | 20 | 5.5-6.5 |
| **0.136** | 50 | 4.25 | 35 | 23 | 4.0-5.0 |
| **0.36** | 100 | 4.25 | 35 | 24 | 6.0-7.5 |
| **0.150** | 50 | 4.75 | 45 | 25 | 4.5-5.5 |
| **0.40** | 100 | 4.75 | 45 | 28 | 6.6-8.6 |

## Effective Face Area $m^2$

| H/L | 100 | 150 | 200 | 250 | 300 | 350 | 400 | 450 | 500 | 550 | 600 | 650 | 700 | 750 | 800 | 850 | 900 | 950 | 1000 |
|---|---|---|---|---|---|---|---|---|---|---|---|---|---|---|---|---|---|---|---|
| 75 | 0.002 | 0.004 | 0.006 | 0.007 | 0.009 | 0.010 | 0.012 | 0.014 | 0.015 | 0.017 | 0.019 | 0.020 | 0.022 | 0.023 | 0.025 | 0.027 | 0.028 | 0.030 | 0.032 |
| 100 | 0.003 | 0.006 | 0.008 | 0.010 | 0.013 | 0.015 | 0.017 | 0.020 | 0.022 | 0.024 | 0.027 | 0.029 | 0.031 | 0.034 | 0.036 | 0.038 | 0.041 | 0.043 | 0.045 |
| 150 | 0.006 | 0.010 | 0.014 | 0.018 | 0.023 | 0.026 | 0.030 | 0.034 | 0.038 | 0.042 | 0.046 | 0.050 | 0.054 | 0.058 | 0.062 | 0.066 | 0.070 | 0.074 | 0.078 |
| 200 | 0.009 | 0.014 | 0.019 | 0.025 | 0.031 | 0.036 | 0.041 | 0.046 | 0.052 | 0.057 | 0.063 | 0.068 | 0.073 | 0.079 | 0.084 | 0.090 | 0.095 | 0.100 | 0.106 |
| 250 | 0.011 | 0.018 | 0.025 | 0.031 | 0.039 | 0.045 | 0.052 | 0.059 | 0.065 | 0.072 | 0.079 | 0.086 | 0.093 | 0.099 | 0.106 | 0.113 | 0.120 | 0.127 | 0.133 |
| 300 | 0.013 | 0.022 | 0.030 | 0.038 | 0.047 | 0.054 | 0.063 | 0.071 | 0.079 | 0.087 | 0.095 | 0.104 | 0.112 | 0.120 | 0.128 | 0.136 | 0.145 | 0.153 | 0.161 |
| 350 | 0.016 | 0.026 | 0.036 | 0.046 | 0.056 | 0.066 | 0.076 | 0.085 | 0.095 | 0.105 | 0.115 | 0.125 | 0.135 | 0.145 | 0.155 | 0.164 | 0.174 | 0.184 | 0.194 |
| 400 | 0.019 | 0.030 | 0.041 | 0.052 | 0.064 | 0.075 | 0.086 | 0.098 | 0.109 | 0.120 | 0.131 | 0.143 | 0.154 | 0.165 | 0.177 | 0.188 | 0.199 | 0.210 | 0.222 |
| 450 | 0.021 | 0.034 | 0.046 | 0.059 | 0.072 | 0.084 | 0.097 | 0.110 | 0.122 | 0.135 | 0.148 | 0.160 | 0.173 | 0.186 | 0.198 | 0.211 | 0.224 | 0.237 | 0.249 |
| 500 | 0.023 | 0.038 | 0.052 | 0.066 | 0.080 | 0.094 | 0.108 | 0.122 | 0.136 | 0.150 | 0.164 | 0.178 | 0.192 | 0.206 | 0.220 | 0.235 | 0.249 | 0.263 | 0.277 |

## Correction Factor for $L_{WA1}$

| Aeffen $m^2$ | 0.01 | 0.02 | 0.05 | 0.1 | 0.2 | 0.4 |
|---|---|---|---|---|---|---|
| Kf[dB(A)] | -9 | -6 | -3 | - | 4 | 7 |

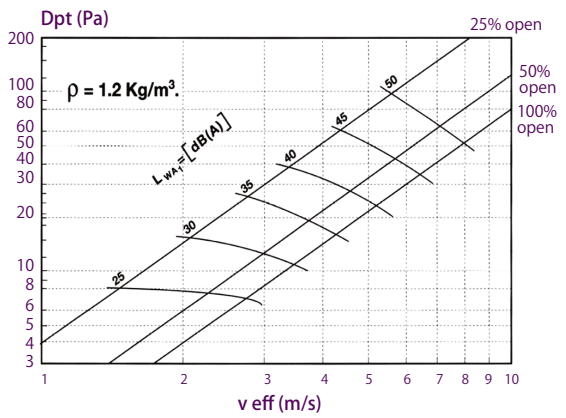


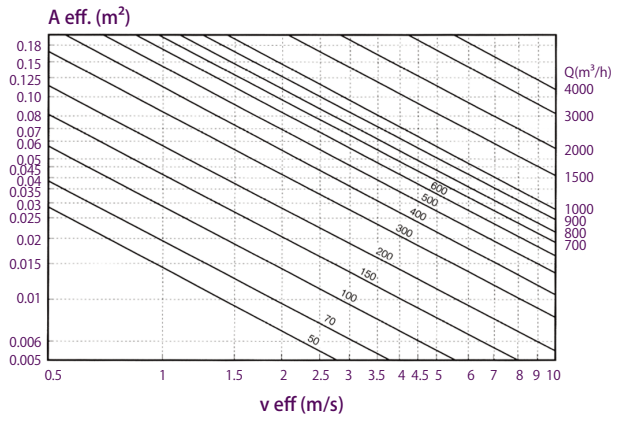


To determine airflow by measuring the Veff in different points of the grille, we find the Veffmed.

Vt (l/s) = Veffmed (m/s) Aeff ($m^2$) 1000

Vt ($m^3$/h) = Veffmed (m/s) Aeff ($m^2$) 3600



tek limited, 14 Seeleys Road, Greet, Birmingham B11 2LQ **T:** +44 (0) 121 766 5005 **E:** sales @tek.ltd.uk **W:** www.tek-ltd.com

**Correction Factor for Ceiling Effect Layout:**
Ceiling distance < 0.8m
The factors of $Al_{0.2}$ (m) are multiplied by 1.33.

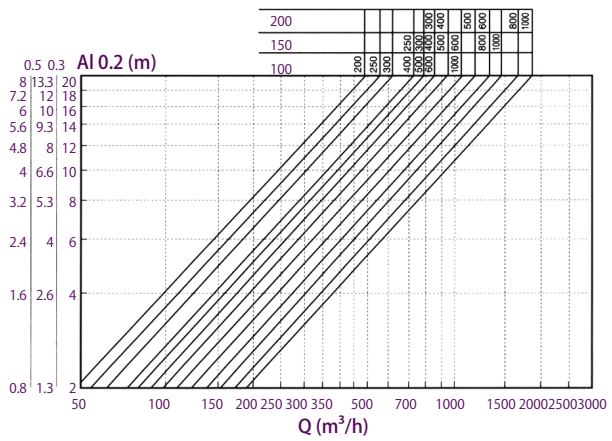


Throw

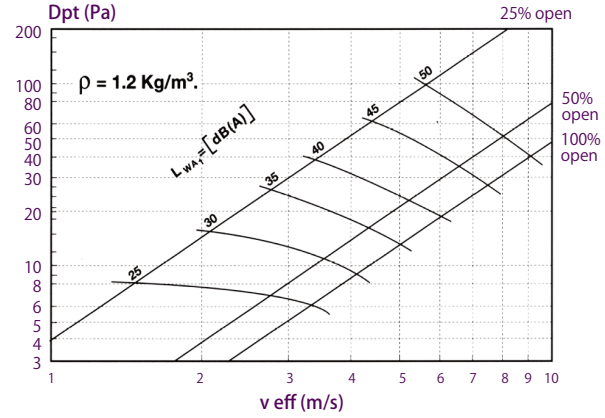


Pressure Loss & Sound Power Level:
Grille + SP - 15%

Throw

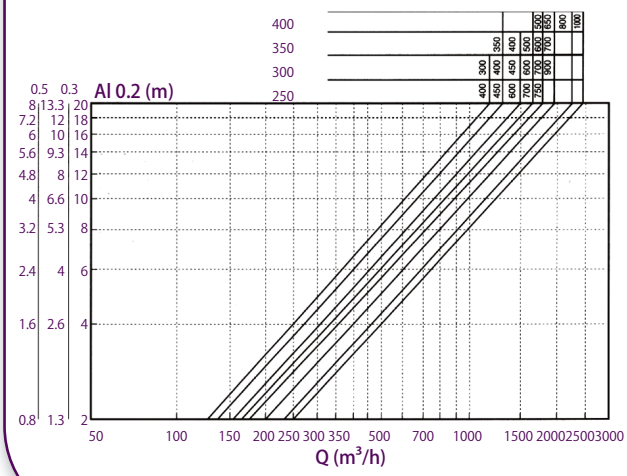


With No Ceiling Effect

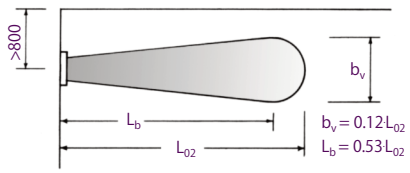


With Ceiling Effect